PrEMIer Filters

ISO 9001:2015 CERTIFIED

PF135QD

COMPACT 1PH CHASSIS MOUNT FILTER 6A TO 20A

Operating Freq.: 50/60Hz
Usable Freq.: DC-400Hz
Max. Operating Voltage: 300VAC +10%
Ambient Temp: -40 to 50C
Climatic Category: 40/110/21
Hipot Rating (L-G): 2700VDC
Typ Weight. LBS (KG): 2.1 (0.95)
Designed to Meet UL1283/CSA22.2/EN60939 Standards
QD Terminals IN (MM): 0.25 (6.35)

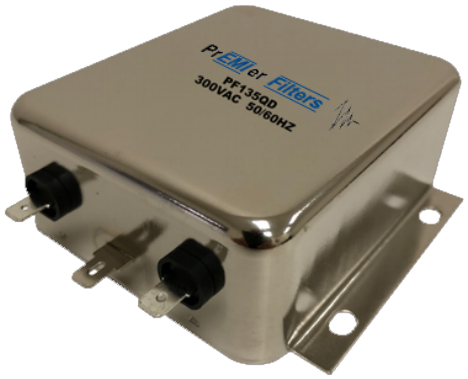

PART NUMBER / ORDERING		
MODEL	AMPERAGE	-Y (L-G CAP, nF)
PF135QD-6-Y	6	0, 1, 2.2, 4.7, 10
PF135QD-10-Y	10	0, 1, 2.2, 4.7, 10
PF135QD-16-Y	16	0, 1, 2.2, 4.7, 10
PF135QD-20-Y	20	0, 1, 2.2, 4.7, 10
EX: PF130QD-6-10 (6Amp Filter With 10nF Y-caps)		

TYPICAL INSERTION LOSS (50/50ohm)					
FREQ MHZ)	0.15	0.5	1.0	10	30
CM, dB	46	60	65	65	61
DM, dB	58	70	72	74	70

MECHANICAL

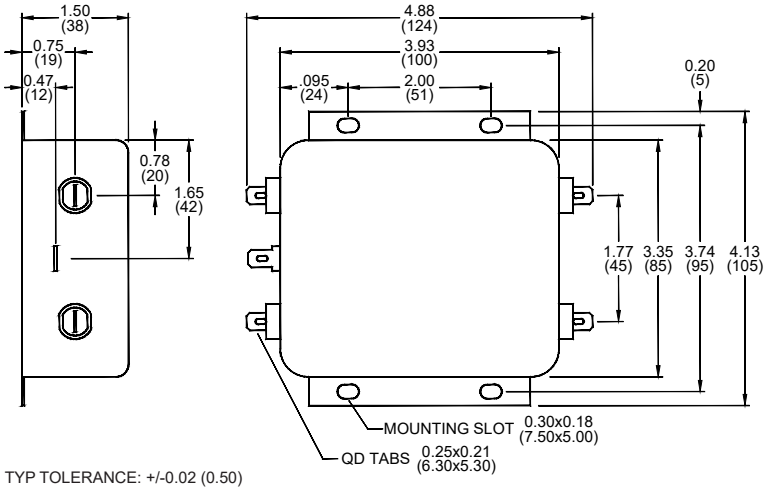

TYP TOLERANCE: +/-0.02 (0.50)

SCHEMATIC

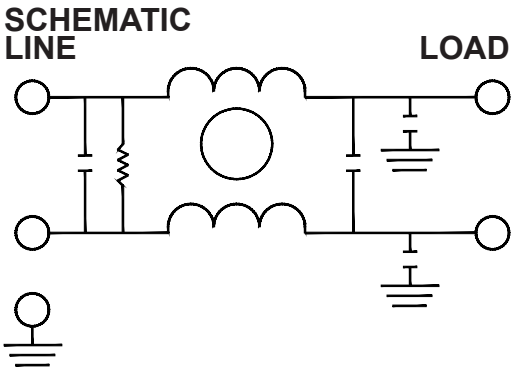

Web Site: www.premieremc.com
E-mail: info@premieremc.com Ph: 657-221-0091